DRAWING MUST BE VIEWED IN ADOBE ACROBAT TO ENABLE CUSTOM LAYERING

1 PER 2.3 FT² FASTENING PATTERN

- ACTUAL ONE (1) FASTENER PER 2.22 SQUARE FEET
- NINE (9) FASTENERS PER BOARD
- ENSURE FASTENER ENGAGES THE TOP FLANGE FOR STEEL DECK APPLICATIONS

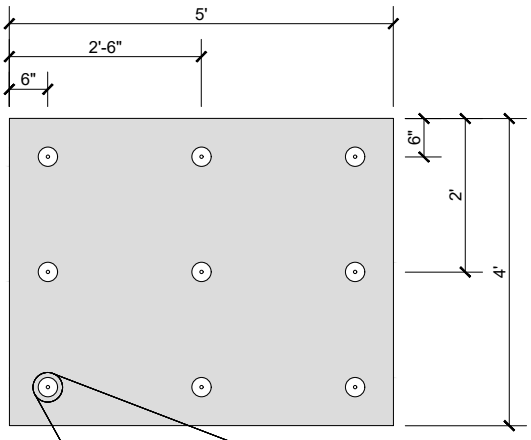

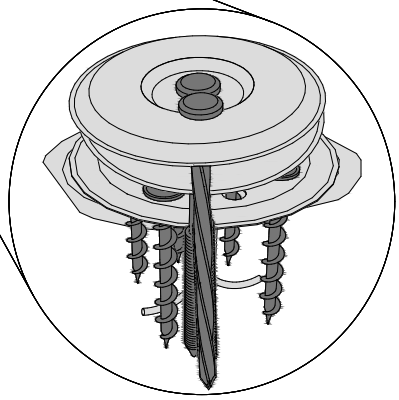

FASTENING PATTERN FOR SHADED AREAS

ROOF HEIGHT LESS THAN OR EQUAL TO 60ft

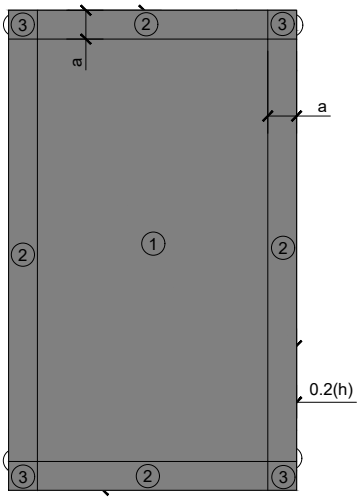

a = 10% of least horizontal dimension or 40% of eave height, whichever is smaller, but not less than either 4% of least horizontal dimension or 3ft

ROOF HEIGHT GREATER THAN 60ft

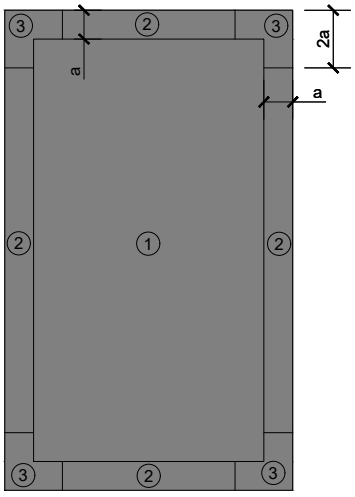

a = 10% of least horizontal roof dimension, but not less than 3ft

ASCE 7-16 ROOF ZONES
(LOW-SLOPE ROOFS θ ≤ 7°)

ASCE 7-05/7-10 ROOF ZONES
(LOW-SLOPE ROOFS θ ≤ 7°)

NOTES:

1. SOPREMA DETAIL DRAWINGS: REFER TO SOPREMA AND OTHER RELATED PUBLISHED DOCUMENTATION, PRODUCT DATA SHEETS (PDS) AND SAFETY DATA SHEETS (SDS) FOR ADDITIONAL INFORMATION. ALL DETAIL DRAWINGS AND RELATED INSTALLATION GUIDELINES ARE PROVIDED BY SOPREMA FOR THE SOLE PURPOSE OF ISSUING A SOPREMA WARRANTY. ACCORDINGLY, THE DETAIL DRAWINGS ARE NOT OFFERED, AND SHOULD NOT BE CONSIDERED, AS A SUBSTITUTE FOR PROFESSIONAL DESIGN SERVICES.
2. SOPREMA NOR ITS EMPLOYEES ARE DESIGNER OF RECORD FOR ANY PROJECT. FASTENING PATTERNS PROVIDED BY SOPREMA ARE FOR SOPREMA WARRANTY PURPOSES ONLY. REFER TO LOCAL BUILDING CODES, DESIGNER OF RECORD DOCUMENTS, AND JURISDICTIONAL/AGENCY APPROVALS FOR PROJECT-SPECIFIC FASTENING REQUIREMENTS.
3. ROOF ZONE GUIDELINES PROVIDED HEREIN ARE OFFERED FOR REFERENCE. REFER TO ASCE/SEI 7 FOR SPECIFIC REQUIREMENTS.

SOPREMA®

US CORPORATE ADDRESS
310 QUADRAL DRIVE
WADSWORTH, OHIO 44281
www.soprema.us
Tel:330.334.0066

PROJECT:

TITLE:

1 FASTENER PER 2.3 FT²,
4X5 BOARD FASTENING PATTERN

DRAWN BY: SOPREMA TECHNICAL SUPPORT, GGALLOWAY

NO.:	REVISION:	DATE:

DATE: 4.6.2020

SCALE: NTS

DRAWING NUMBER:
US.FP.03.03

USAGE OF THIS DETAIL IS GOVERNED BY THE TERMS OF SERVICE FOR SOPREMA DETAILS.
PLEASE CONSULT THESE TERMS OF SERVICE PRIOR TO UTILIZING THIS DRAWING.